Technisches Datenblatt :

MC 25-4 ST5

	Technical characteristics		Metrisch
1.1	Manufacturer		Manitou
1.2	Model Name		MC 25-4 ST5
1.3	Power source		Diesel
1.4	Operator type		Seated
1.5	Max. capacity	Q	2500 kg
1.6	Load centre of gravity	c	500 mm
1.8	Load distance, centre of drive axle to fork	x	621 mm
1.9	Wheelbase	y	1900 mm
	Weight		
2.1	Service weight		4290 kg
2.2	Weight on front axle (laden) / rear axle (laden)		5970 kg / 820 kg
2.3	Weight on front axle (Unladen) / rear axle (Unladen)		1780 kg / 2510 kg
	Wheels		
3.1	Tyres type		Pneumatic
3.2	Dimensions of front wheels		12,5/80-18/12 SL R4
3.3	Dimensions of rear wheels		27x10-12 SKS
3.5	Number of front wheels / rear wheels		2 / 2
3.5.2	Number of drive wheels		4
3.6	Front wheel gauge	b10	1159 mm
3.7	Rear wheel gauge	b11	1176 mm
	Dimensions		
4.1	Tilt of Mast Forward (deg) / Backward (deg)	α / β	12 / 10
4.7	Height of overhead guard (cabin)	h6	2155 mm
4.7	Overall height of low overhead guard (Buggie version)	h6*	1990 mm
4.8	Seat height/stand height	h7	1094 mm
4.19	Overall length	l1	4195 mm
4.20	Length to face of forks	l2	3045 mm
4.21	Overall width	b1	1450 mm
4.22	Forks section / width / length	s / e / l	40 mm x 100 mm / 1200 mm
4.23	Fork carriage ISO 2328 (class/form) A/B		FEM 2A
4.24	Fork carriage width	b3	1260 mm
4.31	Ground clearance below mast	m1	300 mm
4.32	Ground clearance at centre of wheelbase	m2	310 m
4.35	Turning radius	Wa	3405 m
	Performances		
5.1	Travel speed (laden / unladen)		12 km/h / 24.5 km/h
5.2	Lifting speed (laden / unladen)		0.47 m/s / 0.46 m/s
5.3	Lowering speed (laden / unladen)		0.5 m/s / 0.3 m/s
5.5	Drawbar pull (Laden)		3100 daN
5.7	Gradeability (laden)		51 %
5.10	Service brake		Hydraulic brakes by loss of pressure
	Engine		
7.1	Engine brand / model / norm		Kubota / D1803 CRT E5B / Stage V

	Engine		
7.2	Engine power according to ISO 1585		37 kW
7.3	Rated speed		2700 rpm
7.4	Number of cylinders / Capacity of cylinders		3 - 1826 cm^3
7.5	Fuel consumption according to VDI cycle		4.61 l/h

	Miscellaneous		
8.1	Type of drive control		Electronic
8.2	Working hydraulic pressure for attachments		200 Bar
8.3	Oil flow rate for attachments		42 l/min
8.4	Measured/guaranteed mean noise level at the ear of the operator		< 79 dB(A)

Maßzeichnung

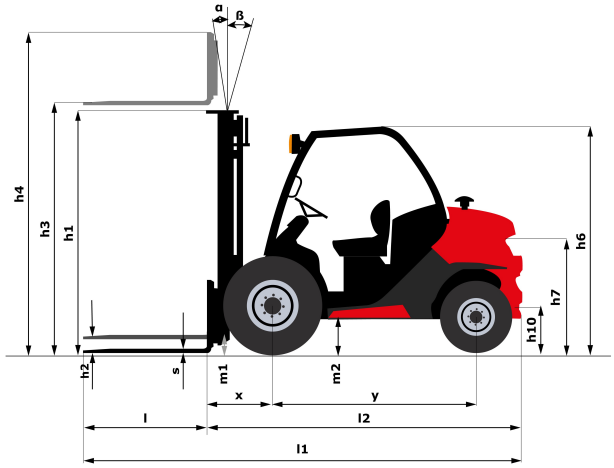

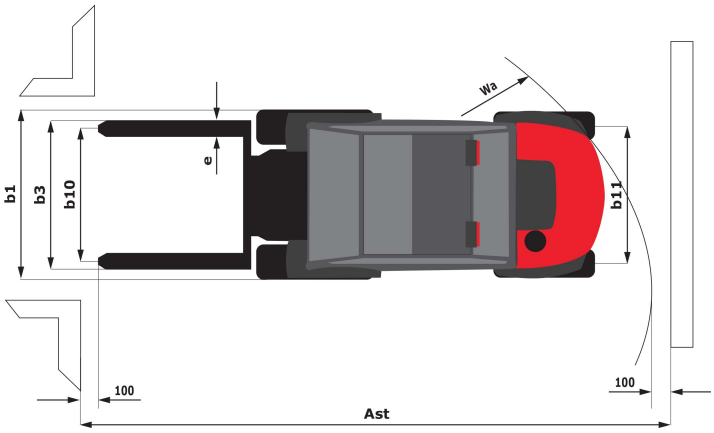

Technische Daten und Resttragfähigkeiten der Hubgerüste

Full Visibility Duplex		FVD 33	FVD 37	FVD 45
h2 - Free lift	mm	112	112	112
h1 - Height mast lowered *	mm	2338	2598	3038
h3 - Lifting Height	mm	3300	3700	4500
h4 - Height mast extended *	mm	4090	4490	5290
α / β - Mast inclination (front / rear)	°	12 / 10	12 / 10	12 / 10
Residual capacity without attachment (Industrial load chart)	kg	2500	1450	800
Residual capacity with hooked-on side shift (Industrial load chart)	kg	2500	1450	800
Height at max capacity	mm	3000	3000	3000
Height at max capacity with hooked-on sideshift	mm	3000	3000	3000

Free Lift Triplex		FLT 34	FLT 37	FLT 40	FLT 43	FLT 47	FLT 55
h2 - Free lift	mm	1210	1310	1410	1510	1660	1920
h1 - Height mast lowered *	mm	1988	2088	2188	2338	2438	2788
h3 - Lifting Height	mm	3400	3700	4000	4300	4700	5500
h4 - Height mast extended *	mm	4236	4536	4836	5168	5536	6408
α / β - Mast inclination (front / rear)	°	12 / 10	12 / 10	12 / 10	12 / 10	12 / 10	6 / 6
Residual capacity without attachment (Industrial load chart)	kg	1900	1500	1350	800	700	5000
Residual capacity with hooked-on side shift (Industrial load chart)	kg	1800	1450	1350	700	700	5000
Height at max capacity	mm	3000	3000	3000	3000	3000	3000
Height at max capacity with hooked-on sideshift	mm	3000	3000	3000	3000	3000	3000

Full Visibility Triplex		FVT 33
h2 - Free lift	mm	124
h1 - Height mast lowered *	mm	1878
h3 - Lifting Height	mm	3300
h4 - Height mast extended *	mm	4079
α / β - Mast inclination (front / rear)	°	12 / 10

rentitag.ch

0800 55 88 89